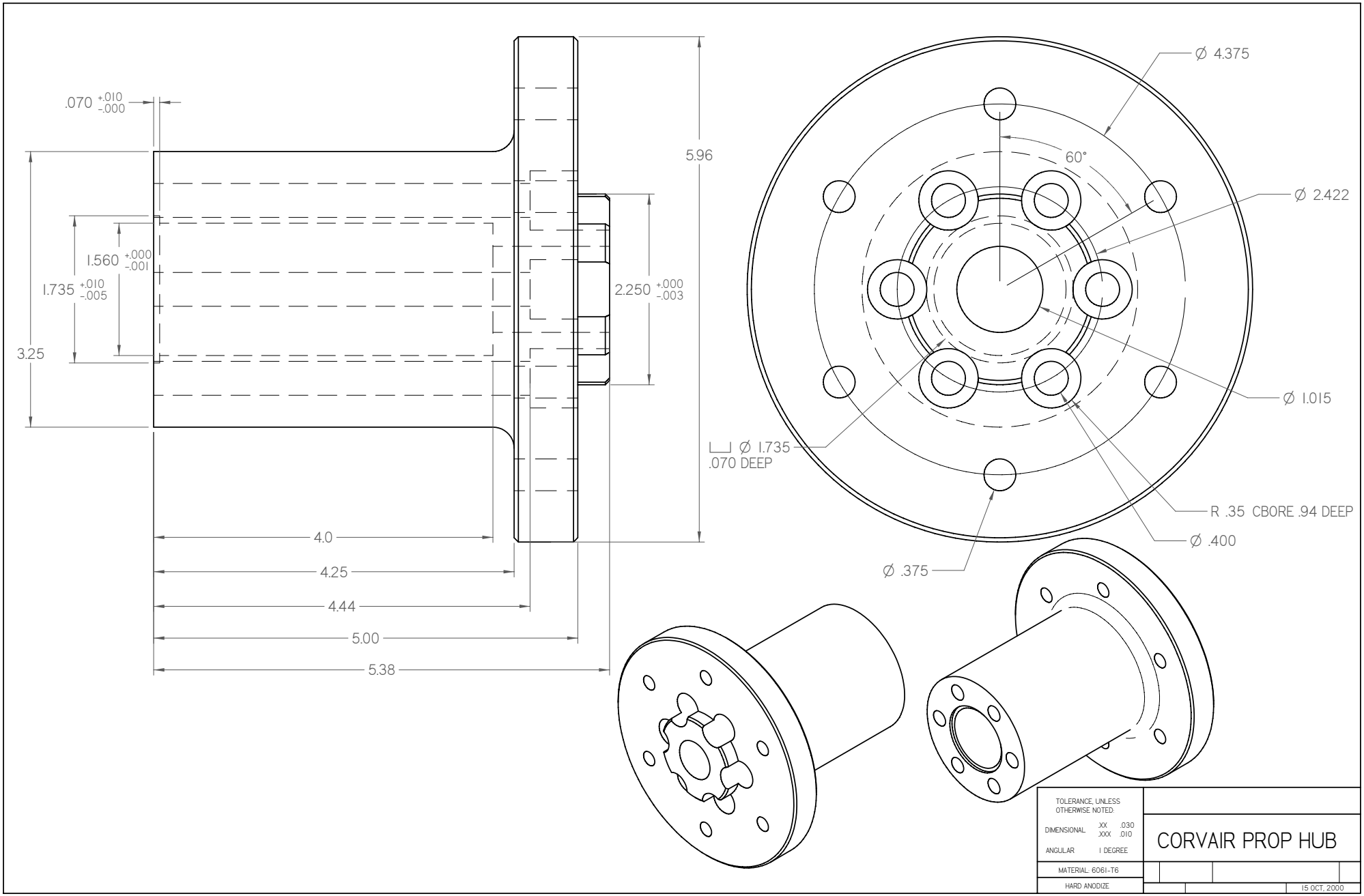
.070 +.010 -.000
5.96
1.560 +.000 -.001
1.735 +.010 -.005
2.250 +.000 -.003
3.25
4.0
4.25
4.44
5.00
5.38
Ø 4.375
60°
Ø 2.422
Ø 1.015
Ø 1.735
.070 DEEP
R .35 CBORE .94 DEEP
Ø .400
Ø .375
TOLERANCE, UNLESS OTHERWISE NOTED:
DIMENSIONAL .XX .030 .XXX .010
ANGULAR 1 DEGREE
MATERIAL: 6061-T6
HARD ANODIZE
CORVAIR PROP HUB
15 OCT, 2000